MADRUGA IRON WORKS, INC.

Metal Fabrication and Machining

305 GANDY DANCER, TRACY, CA 95377 Ph: (209) 832-7003 Fax: (209) 832-2444

www.madrugaironworks.com

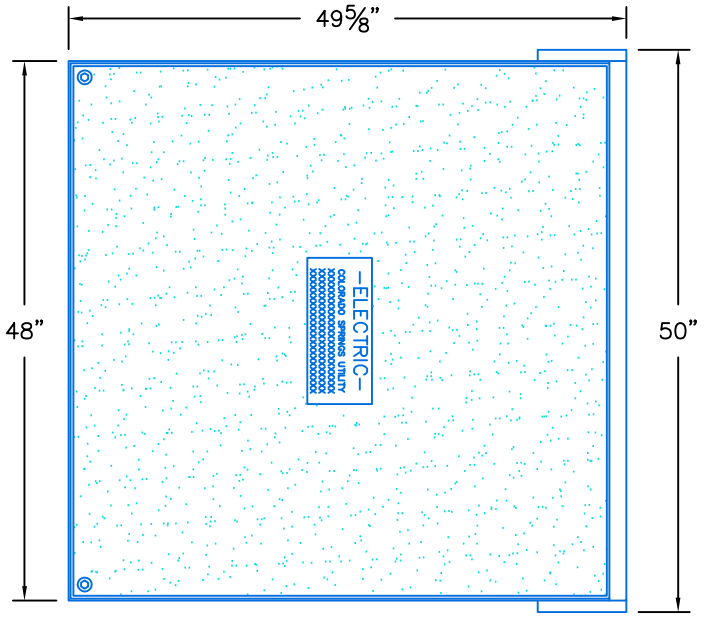

PLAN VIEW

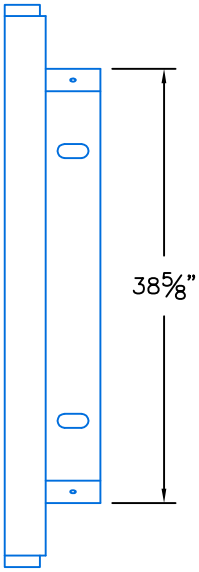

END VIEW

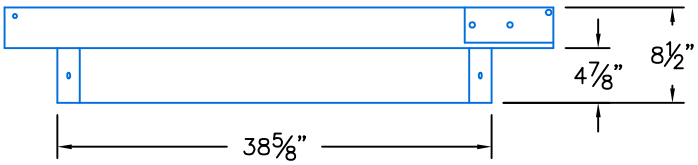

SIDE VIEW

48" x 48" (Nominal) Colorado Style Frame & Cover Assembly

Approximate Weight: 260 lbs
Loading: AASHTO H-20 - Traffic Loading
Live Load: 16,000 lb. Wheel Load -
Impact: 0.00%

NOTES:
1. *ALUMINUM, SLIP-RESISTANT COVER*
2. *CLEAR OPENING*
3. *BOLT-DOWN (2-PLACES)*
4. *HINGED*
5. *CAPABLE OF 180° OPENING*
6. *TORSION ASSIST*
7. *ADJUSTABLE FRAME*
8. *GALVANIZED*

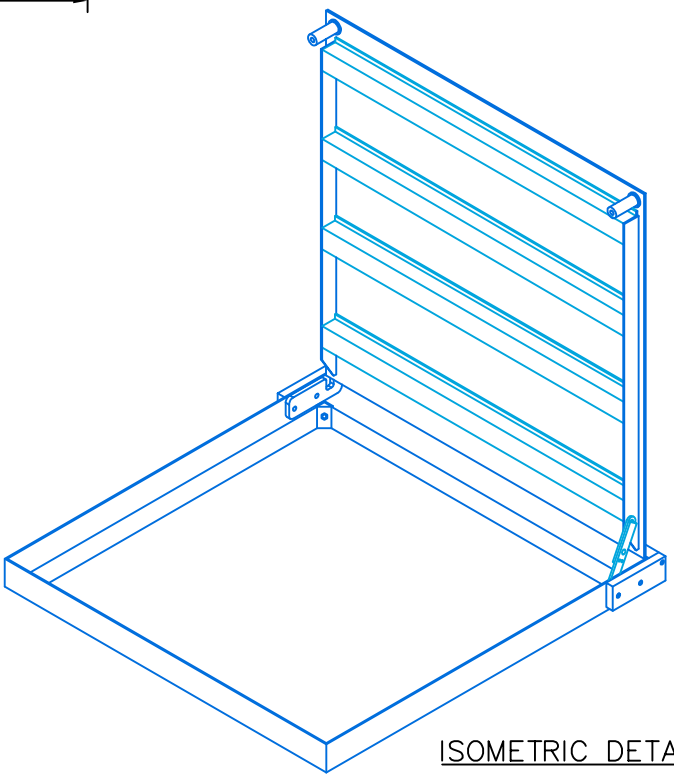

ISOMETRIC DETAIL